PROFESSIONAL
GRADE HDMI COMMUTATION

Dr.HD®

2 YEARS WARRANTY

# HDMI удлинитель по витой паре с HDBaseT Dr.HD EX 150 HBT KVM

## Thank you for purchasing this product

For optimum performance and safety, please read these instructions carefully before connecting, operating or adjusting this product. Please keep this manual for future reference.

## Surge protection device recommended

This product contains sensitive electrical components that may be damaged by electrical spikes, surges, electric shock, lighting strikes, etc. Use of surge protection systems is highly recommended in order to protect and extend the life of your equipment.

## Table of Contents


1. Introduction..... 1
2. Features..... 1
3. Package Contents..... 2
4. Specifications..... 2
5. Operation Controls and Functions..... 4
   5.1 Transmitter Panel..... 4
   5.2 Receiver Panel..... 5
   5.3 IR Pin Definition..... 6
6. Application Example..... 7

# 1. Introduction

This 18Gbps HDBaseT Extender can extend HDMI signal, bi-directional IR control signal and USB KVM signal to a distance up to 492ft / 150m (Long Reach Mode) via a single CAT6 cable. This product converts HDMI signal to standard HDBaseT signal and transmits it through LAN cable. It can easily control signal source device or display device from the remote end through bi-directional IR signal pass-through function. Video resolution is up to 4K2K @60Hz YUV 4:4:4. It also supports POC function.

The extender can be widely used in other fields such as video conference system, multimedia signal broadcasting, HDMI signal extension, etc.

# 2. Features

☆ HDMI 2.0b and HDCP 2.2 compliant
☆ Support 18Gbps video bandwidth
☆ Support video resolution up to 4K2K@60Hz YUV 4:4:4
☆ With Mode DIP switch to select HDBaseT Mode & Long Reach Mode
HDBaseT Mode:
USB supports USB 2.0 transmission (support connecting with USB camera, USB flash drive and other devices); the audio & video signal transmission distance can be extended up to 328ft / 100m for 4K60
Long Reach Mode:
USB only supports HID (Human Interface Device) device; the audio & video signal transmission distance can be extended up to 492ft / 150m for 1080P or 394ft / 120m for 4K60
☆ Bi-directional IR signal and USB KVM signal pass-through are supported
☆ Support bi-directional POC (Power over Cable) function
☆ Advanced EDID management
☆ Compact design for easy and flexible installation

# 3. Package Contents

① 1 x 18Gbps HDBaseT Extender (Transmitter)
② 1 x 18Gbps HDBaseT Extender (Receiver)
③ 1 x IR Blaster cable (1.5 meters)
④ 1 x IR Wideband Receiver cable (1.5 meters)
⑤ 4 x Mounting Ears
⑥ 8 x Machine Screws (KM3*4)
⑦ 1 x 24V/1A Locking Power Supply
⑧ 1x User Manual

# 4. Specifications

| Technical | |
|---|---|
| HDMI Compliance | HDMI 2.0b |
| HDCP Compliance | HDCP 2.2 |
| Video Bandwidth | 18Gbps |
| Video Resolution | Up to 4K2K@60Hz YUV 4:4:4 |
| USB Compliance | USB 2.0 |
| IR Level | 5Vp-p |
| IR Frequency | Wideband 20K-60KHz |
| Transmission Distance | HDBaseT Mode: 4K60 --328ft / 100m<br>Long Reach Mode: 1080P--492ft / 150m;<br>4K60 -- 394ft / 120m |
| Color Space | RGB 4:4:4, YCbCr 4:4:4, YCbCr 4:2:2, YCbCr 4:2:0 |
| Color Depth | 8/10/12bit |
| HDR | HDR, HDR10, HDR10+, Dolby Vision, HLG |
| Audio Format | LPCM 7.1CH, Dolby True HD and DTS-HD Master |
| ESD Protection | Human body model — ±8kV (Air-gap discharge) & ±4kV (Contact discharge) |

| **Connection** | |
|---|---|
| Transmitter | Input: 1×HDMI IN [Type A, 19-pin female]<br>1×IR IN [3.5mm Stereo Mini-jack]<br>1×SERVICE [Micro-USB jack]<br>1×USB [USB-B, 4-pin female]<br>Output: 1×HDBT OUT [RJ45]<br>1×IR OUT [3.5mm Stereo Mini-jack] |
| Receiver | Input: 1×HDBT IN [RJ45 with light]<br>1×IR IN [3.5mm Stereo Mini-jack]<br>1×SERVICE [Micro-USB jack]<br>Output: 1×HDMI OUT [Type A, 19-pin female]<br>1×IR OUT [3.5mm Stereo Mini-jack]<br>2×USB 2.0 [USB-A, 4-pin female] |
| **Mechanical** | |
| Housing | Metal Enclosure |
| Color | Black |
| Dimensions | Transmitter / Receiver:140mm (W)×65mm (D)×18mm (H) |
| Weight | Transmitter: 245g, Receiver: 249g |
| Power Supply | DC 24V/1A;<br>Support bi-directional POC function |
| Power Consumption | 13.2W (Max.) |
| Operating Temperature | 0°C ~ 40°C / 32°F ~ 104°F |
| Storage Temperature | -20°C ~ 60°C / -4°F ~ 140°F |
| Relative Humidity | 20~90% RH (non-condensing) |

# 5. Operation Controls and Functions

## 5.1 Transmitter Panel

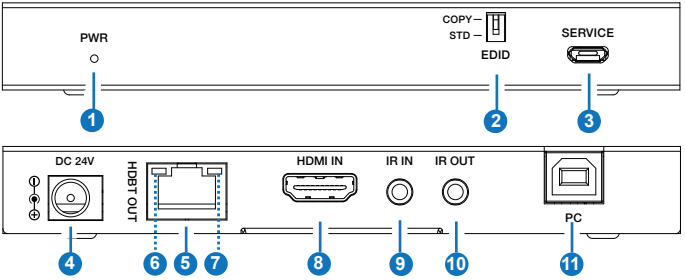


| No. | Name | Function Description |
|---|---|---|
| 1 | PWR LED | The red LED is on when the Transmitter is powered on. |
| 2 | EDID DIP switch | Used for audio EDID setting (dial to COPY by default).<br>**COPY:** Copy the EDID of the HDMI OUT port of Receiver.<br>**STD:** Default 1080P 2CH |
| 3 | SERVICE | Firmware update port. |
| 4 | DC 24V | DC 24V/1A power input port.<br>*Note that the extender supports POC function, it means that either Transmitter or Receiver is connected to 24V/1A power supply, the other doesn't need power supply.* |
| 5 | HDBT OUT | HDBT output port, connecting to the HDBT IN port of the Receiver with CAT6 cable. |
| 6 | Link Signal Indicator (Green) | ▪ Illuminating: Transmitter and Receiver are in good connection status.<br>▪ Flashing: Transmitter and Receiver are in poor connection status.<br>▪ Dark: Transmitter and Receiver are not connected. |
| 7 | Data Signal Indicator (Yellow) | ▪ Illuminating: HDMI signal with HDCP.<br>▪ Flashing: HDMI signal without HDCP.<br>▪ Dark: No HDMI signal. |
| 8 | HDMI IN | HDMI signal input port, connecting to HDMI source device such as DVD play or Set Top Box. |

| No. | Name | Function Description |
|---|---|---|
| 9 | IR IN | Connect to IR receiver cable, the IR receive signal will emit to the IR OUT port of the Receiver. |
| 10 | IR OUT | Connect to IR blaster cable, the IR emit signal is from the IR IN port of the Receiver. |
| 11 | PC | USB-B port, connecting to PC. |

## 5.2 Receiver Panel

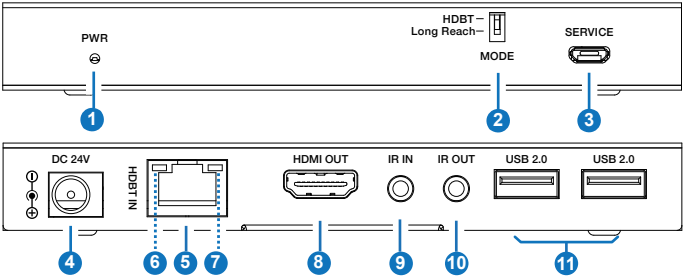


| No. | Name | Function Description |
|---|---|---|
| 1 | Power LED | The power LED is on when the Receiver is powered on. |
| 2 | MODE DIP switch | Used for Mode switching (dial to HDBT by default).<br>**HDBT:** Switching to the HDBaseT Mode.<br>**Long Reach:** Switching to the Long Reach Mode. |
| 3 | SERVICE | Firmware update port. |
| 4 | DC 24V | DC 24V/1A power input port.<br>*Note that the extender supports POC function, it means that either Transmitter or Receiver is connected to 24V/1A power supply, the other doesn't need power supply.* |
| 5 | HDBT IN | HDBT input port, connecting to the HDBT OUT port of the Transmitter with CAT6 cable. |

| No. | Name | Function Description |
|---|---|---|
| 6 | Link Signal Indicator (Green) | ▪ Illuminating: Transmitter and Receiver are in good connection status.<br>▪ Flashing: Transmitter and Receiver are in poor connection status.<br>▪ Dark: Transmitter and Receiver are not connected. |
| 7 | Data Signal Indicator (Yellow) | ▪ Illuminate: HDMI signal with HDCP.<br>▪ Flash: HDMI signal without HDCP.<br>▪ Dark: No HDMI signal. |
| 8 | HDMI OUT | HDMI signal output port, connecting to HDMI display device such as TV or monitor. |
| 9 | IR IN | Connect to the IR receiver cable. The IR signal will send to the IR OUT port of the Transmitter. |
| 10 | IR OUT | Connect to the IR blaster cable, the IR signal is from IR IN port of the Transmitter. |
| 11 | USB 2.0 ports | Two USB-A ports, connecting to USB 2.0 devices. (The maximum output current of a single USB 2.0 port is 500mA, exceeding which it will not work.) |

## 5.3 IR Pin Definition

IR Receiver and Blaster pin's definition is as below:

IR RECEIVER

IR BLASTER

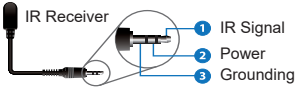


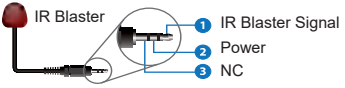


**Note:**

When the angle between the IR receiver and the remote control is ± 45 °, the transmission distance is 0-5 meters;

When the angle between the IR receiver and the remote control is ± 90 °, the transmission distance is 0-8 meters.

# 6. Application Example

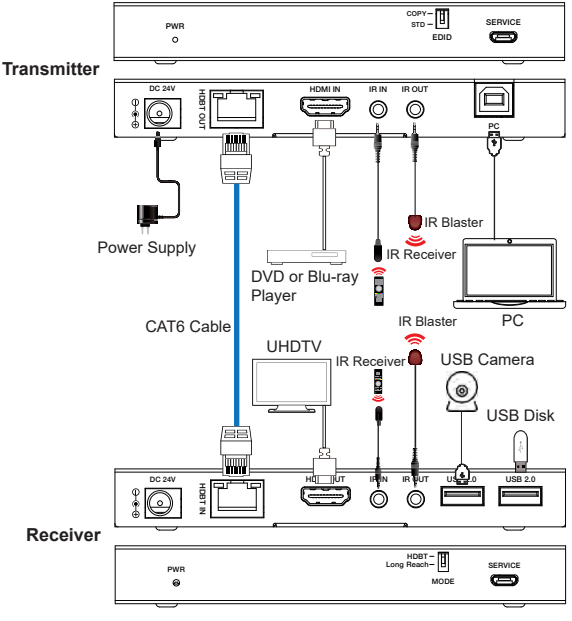


The terms HDMI and HDMI High-Definition Multimedia interface, and the HDMI Logo are trademarks or registered trademarks of HDMI Licensing LLC in the United States and other countries.